**Project Design Phase-II**
**Data Flow Diagram & User Stories**

| | |
|---|---|
| Date | 19 Feb 2026 |
| Team ID | LTVIP2026TMIDS83753 |
| Project Name | Weather-Based Prediction of Wind Turbine Energy Output: A Next-Generation Approach to Renewable Energy Management |

**Data Flow Diagrams:**

A Data Flow Diagram (DFD) is a traditional visual representation of the information flows within a system. A neat and clear DFD can depict the right amount of the system requirement graphically. It shows how data enters and leaves the system, what changes the information, and where data is stored.

Example: DFD Level 1 (Industry Standard)

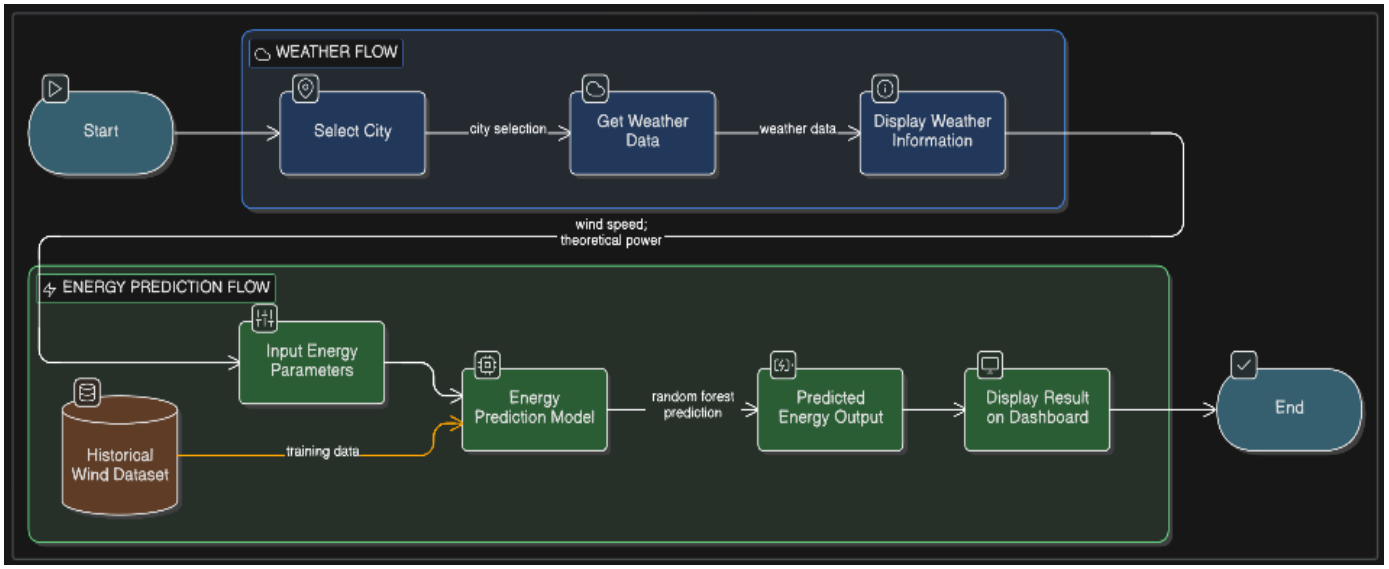

Use the below template to list all the user stories for the product.

| User Type | Functional Requirement (Epic) | User Story Number | User Story / Task | Acceptance criteria | Priority | Release |
|---|---|---|---|---|---|---|
| Customer (Mobile user) | Landing Page | USN-1 | As a user, I can access the wind energy prediction landing page. | I can see project title and Get Started button. | High | Sprint-1 |
| | Navigation | USN-2 | As a user, I can click "Get Started" to navigate to the dashboard. | I am redirected to the Wind Energy Dashboard. | High | Sprint-1 |
| | Weather Information | USN-3 | As a user, I can select a city to retrieve weather details. | Weather data is displayed successfully. | Medium | Sprint-1 |
| | Energy Prediction | USN-4 | As a user, I can enter wind speed and theoretical power values. | Input fields accept numeric values only. | High | Sprint-1 |
| | Energy Prediction | USN-5 | As a user, I can click "Predict Energy" to generate energy output. | System displays predicted wind energy output. | High | Sprint-1 |
| | Validation | USN-6 | As a user, I receive validation if inputs are missing or incorrect. | System shows error message for invalid input. | High | Sprint-1 |
| | Recalculation | USN-7 | As a user, I can modify inputs and predict again. | System updates prediction instantly. | High | Sprint-1 |
| | | | | | | |
| Administrator | Model Training | USN-8 | As an admin, I can train the Random Forest model using historical dataset. | Model is successfully trained and saved. | High | Sprint-1 |
| | Dataset Management | USN-9 | As an admin, I can update the historical wind dataset. | Updated dataset reflects in model retraining. | Medium | Sprint-2 |
| | Model Improvement | USN-10 | As an admin, I can improve prediction accuracy. | Improved model shows better evaluation metrics. | Medium | Sprint-2 |
| | Deployment | USN-11 | As an admin, I can deploy the application locally using Flask. | Application runs on local server without errors. | High | Sprint-1 |
| | | | | | | |